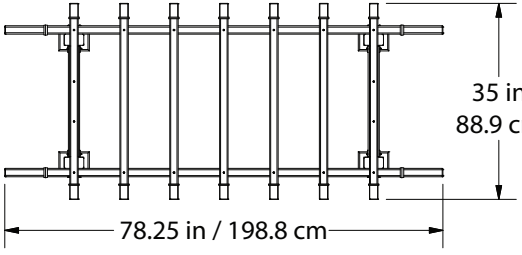
35 in
88.9 cm
78.25 in / 198.8 cm

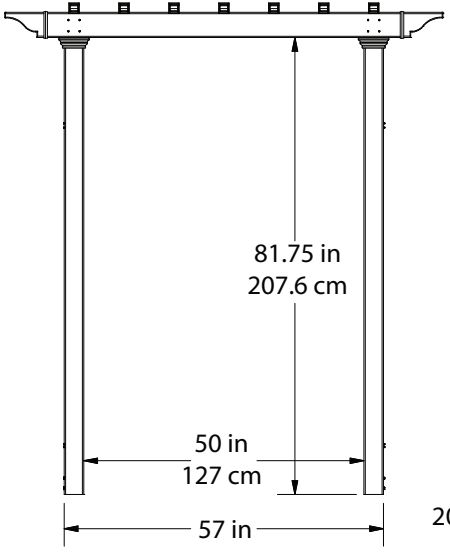
81.75 in
207.6 cm
50 in
127 cm
57 in

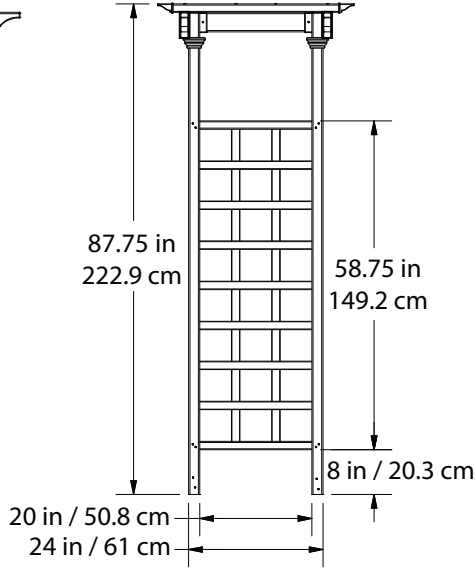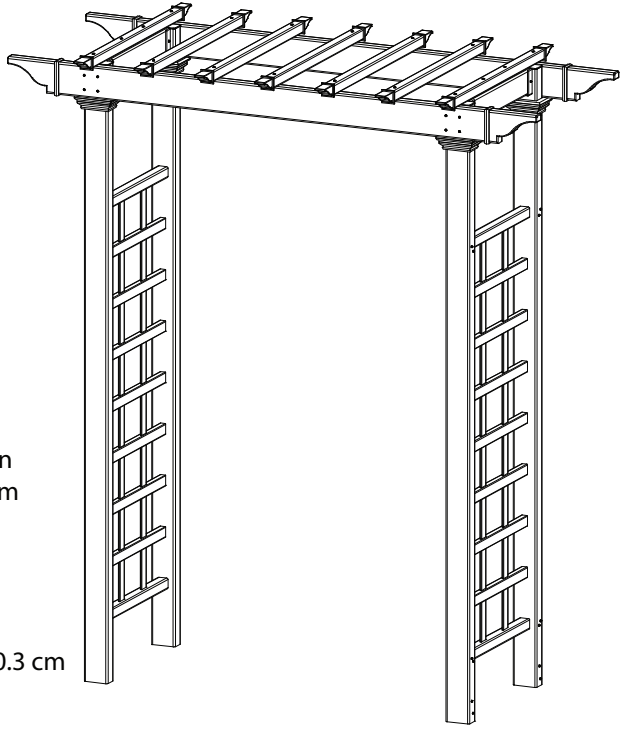
87.75 in
222.9 cm
58.75 in
149.2 cm
8 in / 20.3 cm
20 in / 50.8 cm
24 in / 61 cm